Steam System Management:

Understanding safety relief valves, pressure reducing valves, and steam traps

Gus Nick-Mechanical Engineer with Somes-Nick
Bill Dwyer- Mechanical Engineer with Somes-Nick

Outline

- Steam system basics
- Safety relief valves and staying within ASME codes
- Steam traps and importance of testing them
- Pressure reducing valve basics and operational tips

1. GENERATION

2. DISTRIBUTION

3. HEAT TRANSFER

4. CONDENSATE RETURN

1. GENERATION

The first is **Generation**. During this stage – **in the boiler** – heat is applied to water to raise its temperature. After the **water has vaporized**, the resulting steam moves into the second stage of the steam loop. A Boiler is protected by a relief valve

2. DISTRIBUTION

This is simply the **movement of the steam** within a closed system to its point of use. Typically done at high pressure then step down at the point of use with a pressure reducing valve. Overpressure conditions are protected by relief valves

3. HEAT TRANSFER

In the heat transfer portion of the steam loop, the heat of the steam is……**transferred.** In other words, it is put to work **doing countless jobs**. In hospitals this could be for HX heating domestic or building heat hot water, sterilizers, and humidifiers

4. CONDENSATE RETURN

As the **steam gives up its heat** through heat transfer or use, it condenses or **changes** its state – this time **from a gas back into a liquid**. This is called condensate. Now called liquid gold. Easy savings if returned as water is already heated and treated.

Diagram of a Closed Loop Steam System

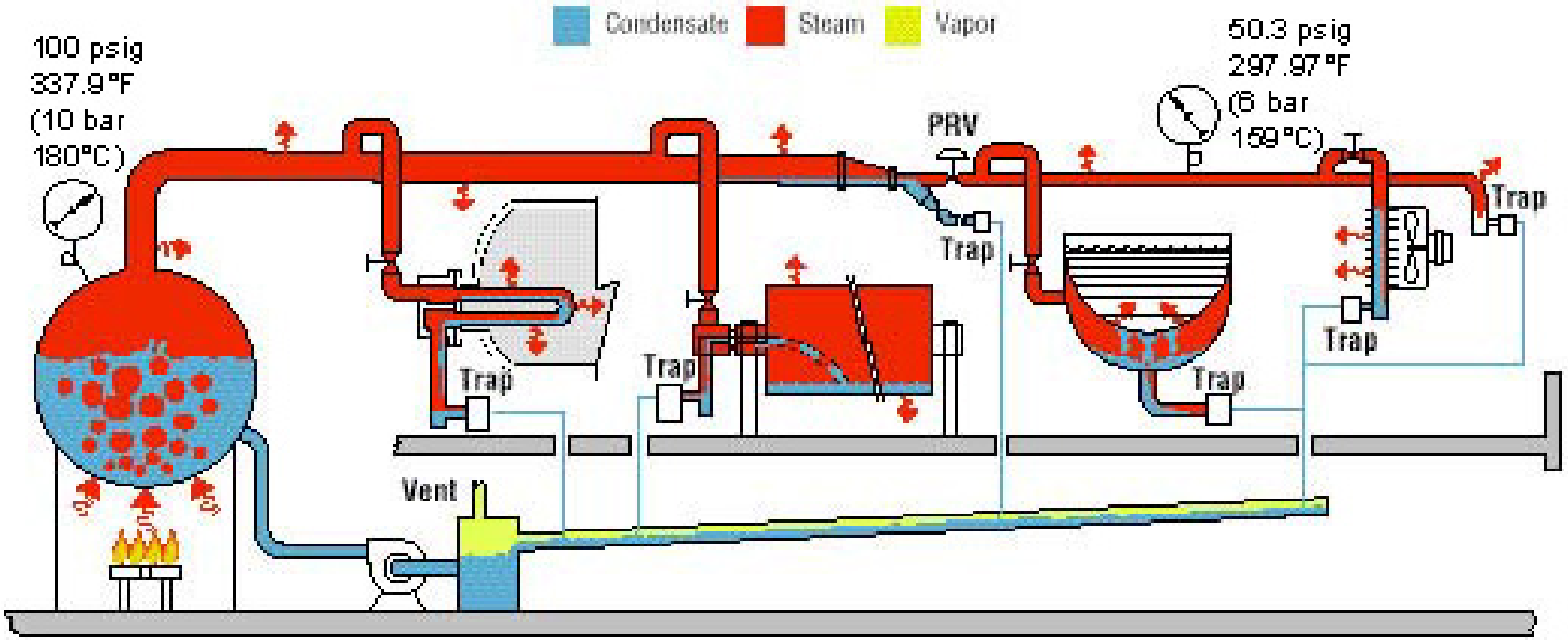

ASME Safety Relief Valve…
Final line of defense

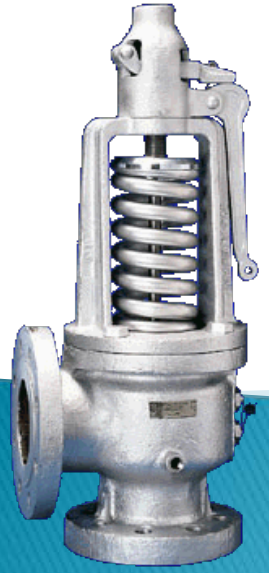

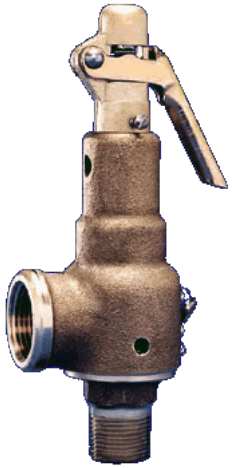

Safety Relief Valve (SRV) Basics

- SRVs prevent catastrophic explosions from over pressure scenarios
- Always working, no need for external power source
- Spring tension is set to desired relief pressure
- ASME codes require SRV in steam systems

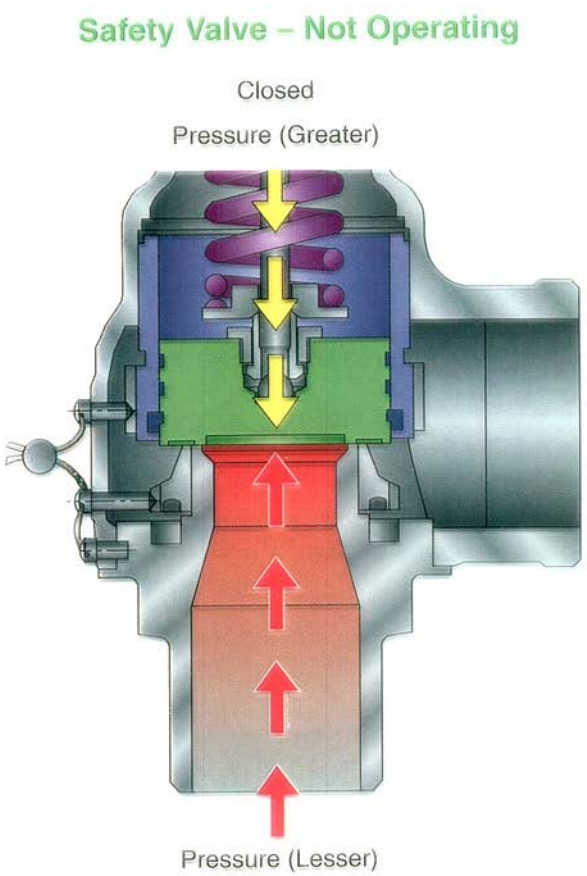

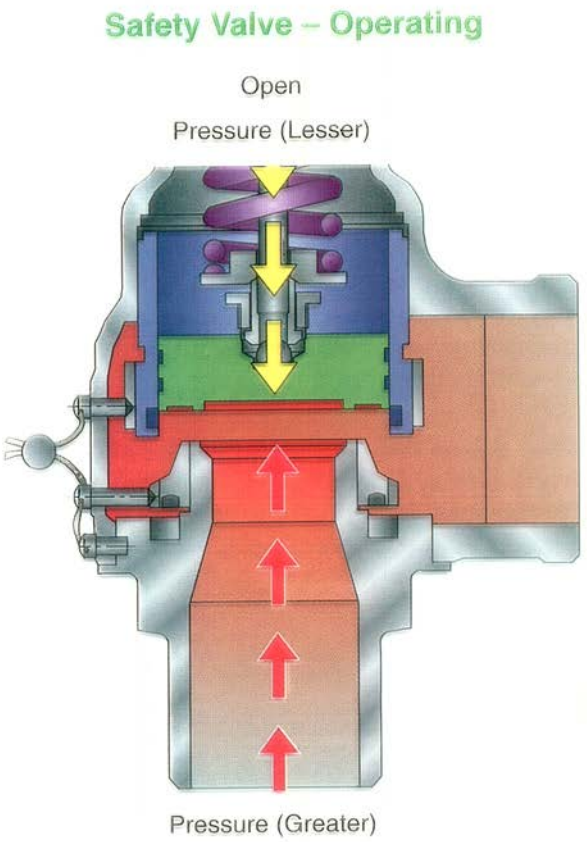

ASME Coded Valves

- ASME codes apply to boilers and pressure vessels
- ASME coded valves are not adjustable
- Stamps must be visible and seals intact to be compliant
- National Board checks for compliance
- Safety valves are concerned with Sections I, IV, and VIII

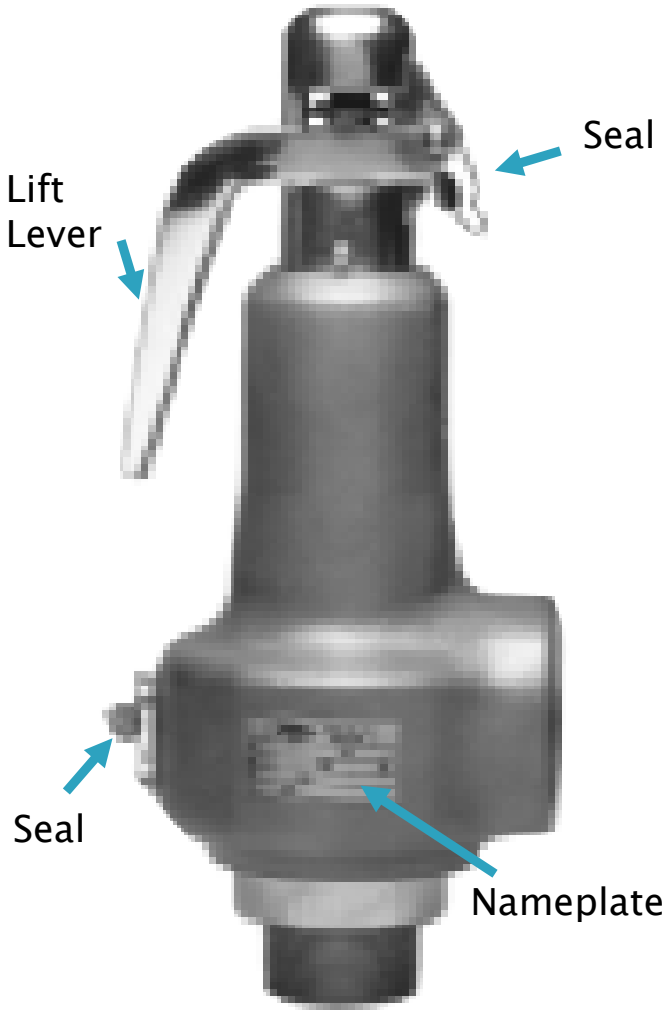

Highlighting aspects to a ASME coded valve

National Board of Boiler and Pressure Vessel Inspectors

- "The Cops"
- NB reports to the ASME designated inspection agency
- NB is responsible for enforcement of the code with both users and pressure relief device manufacturers
- **NB has ability shutdown operations if not in code**

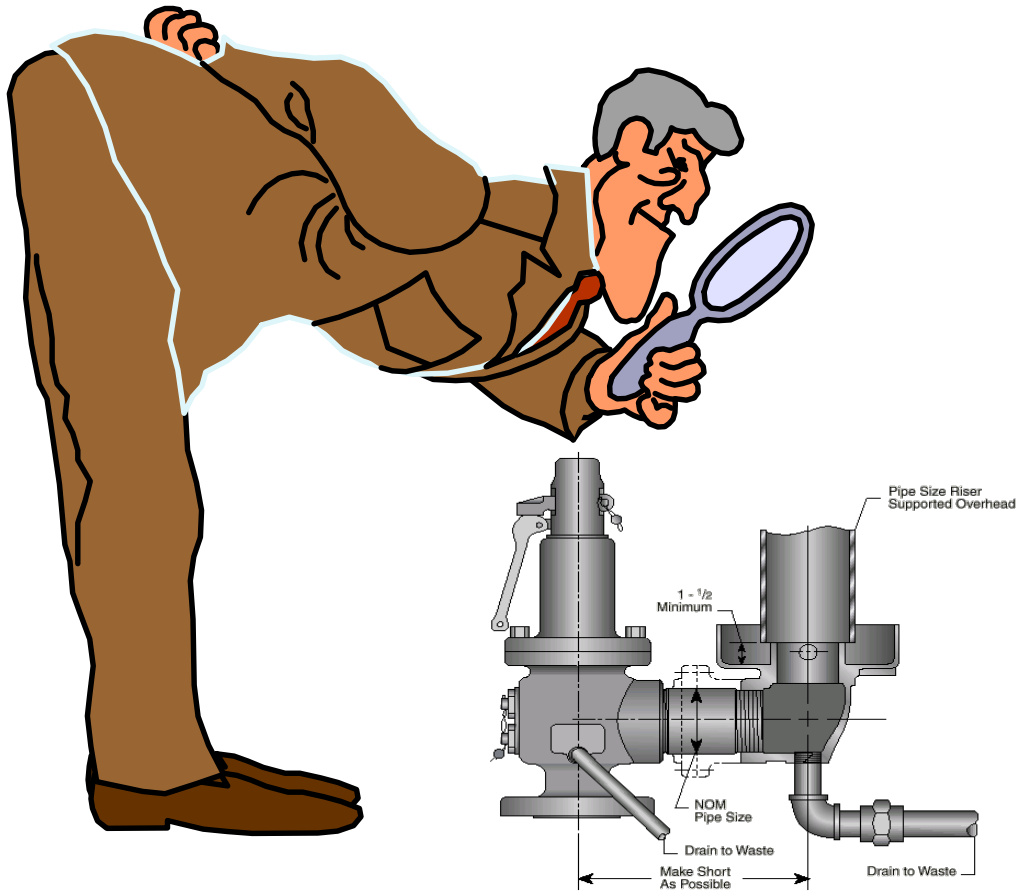

Section I and IV Boilers

- Section I covers fire powered vessels operating above 15 psi
- Section IV covers fire powered vessels operating below 15 psi
- Requires a SRV to prevent boiler from exploding
- 10% blowdown requirement

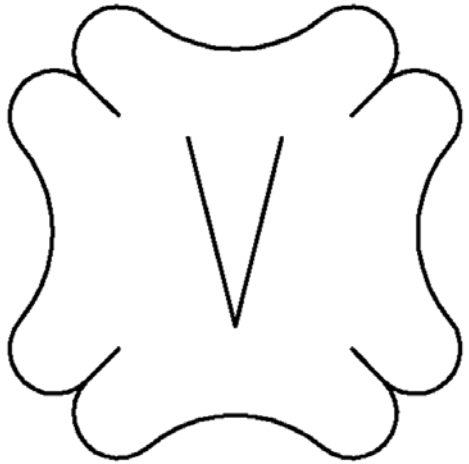

Section I stamp visible on all Sec I valves

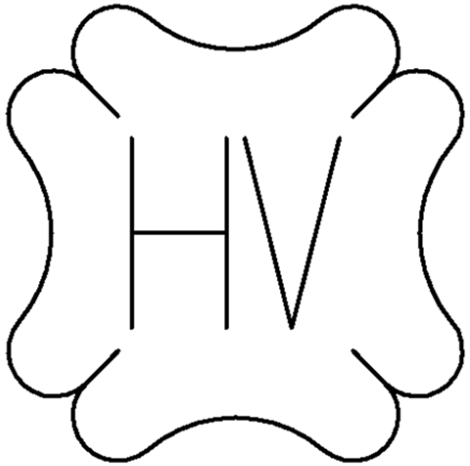

Section IV stamp visible on all Sec I valves

Section VIII Pressure Vessels

- Applies to all pressure vessels greater than 15 psi and less than 3000psi
- Applies to deaerators, sterilizers, and PRV stations
- Steam distribution piping all falls under ASME VIII
- SRV are required
- No Blowdown specification

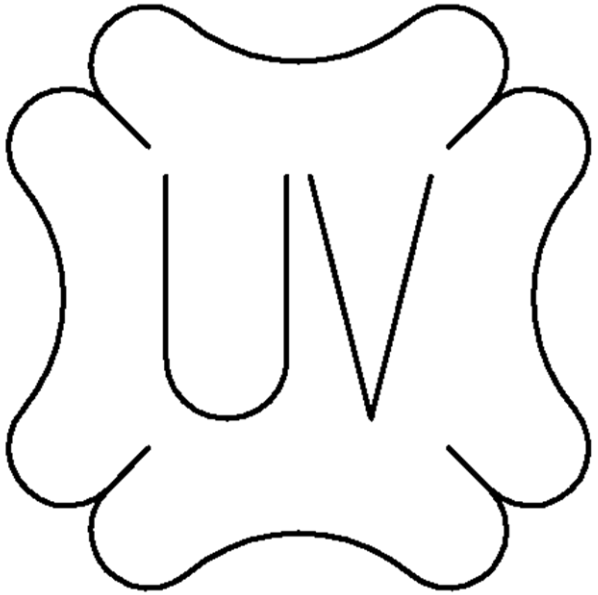

Section VIII stamp: has to be visible on the valve

Sizing SRV for Sec VIII Steam Distribution

- SRV sized for maximum capacity of bypass or PRV failing open whichever is greater
- SRV is sized for the combination of PRVs in parallel
- Recommend a 10psi differential or higher between operating pressure and set point of the relief valve
- Set Pressure of the relief valve $\geq$ Maximum allowable working pressure of equipment

ASME Section VIII Set Pressure And Blowdown Tolerances

Unfired Pressure Vessel - Section VIII - Code 'UV'			
Set Pressure psig [barg]	Set Pressure Tolerance	Blowdown	Overpressure
15 - 30 [1.03 - 2.07]	` 2 psig [` 0.14 barg]	N/A	3 psig [0.21 barg]
31 - 70 [2.14 - 4.83]	` 2 psig [` 0.14 barg]	N/A	10%
71 & Up [4.90 & Up]	` 3%	N/A	10%

Notes on SRV Installations

- Do not put weight of vent pipe on SRV outlet
- Use drip pan elbows or safety vent connectors
- Drain condensate in vent pipe
- Always install vertically
- For multiple relief valves common vent pipe's cross sectional area > combined outlet area of all it's relief valves

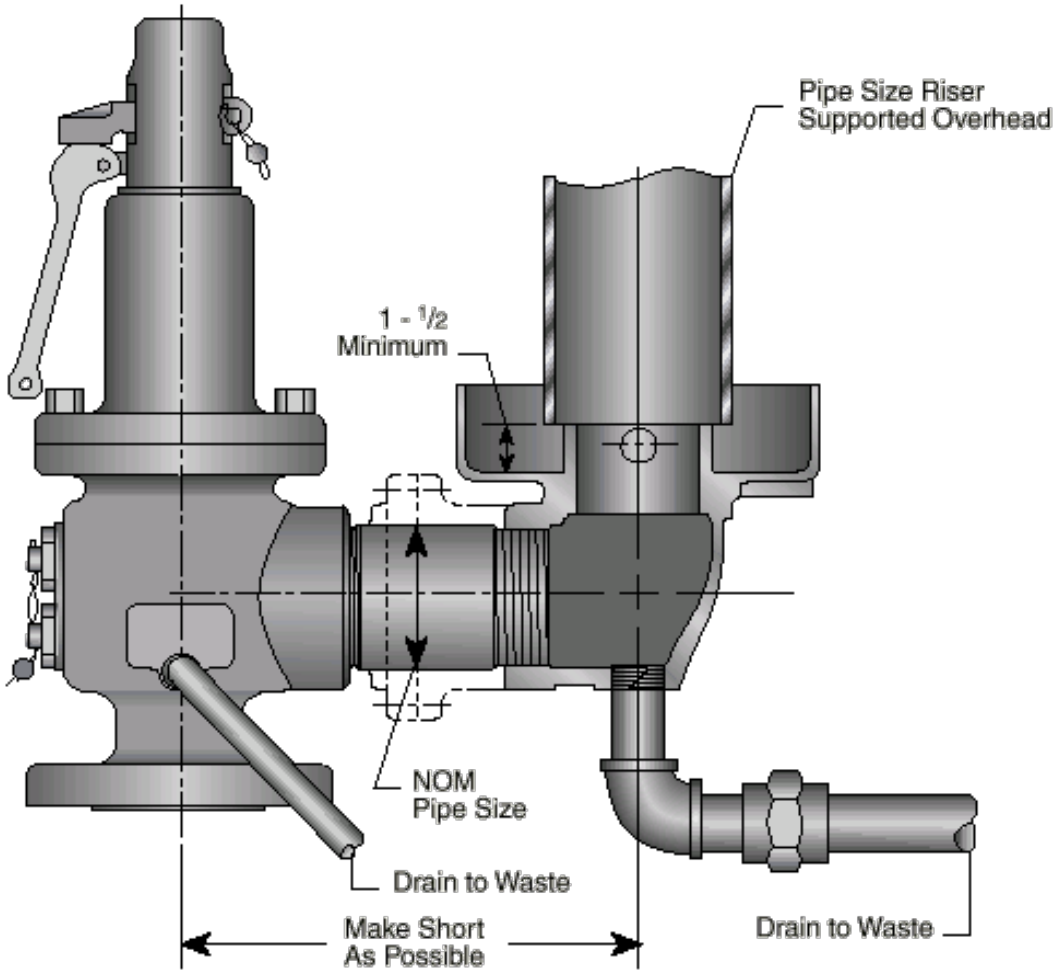

Action Items / Takeaways

- List all your SRVs and their certificate of conformance
- Conduct regular visual inspections to determine if in code. Ensure seals are intact, name plate is legible, no visible leaks
- Address issues when SRVs pop and fix them. They should never pop!!
- Recertify SRV on high side of tolerance to prevent nuisance trips.

Steam Traps

Steam Trap Functions & Types

- Automation valve
- Discharges condensate & air quickly as possible
- Prevent Steam Discharge

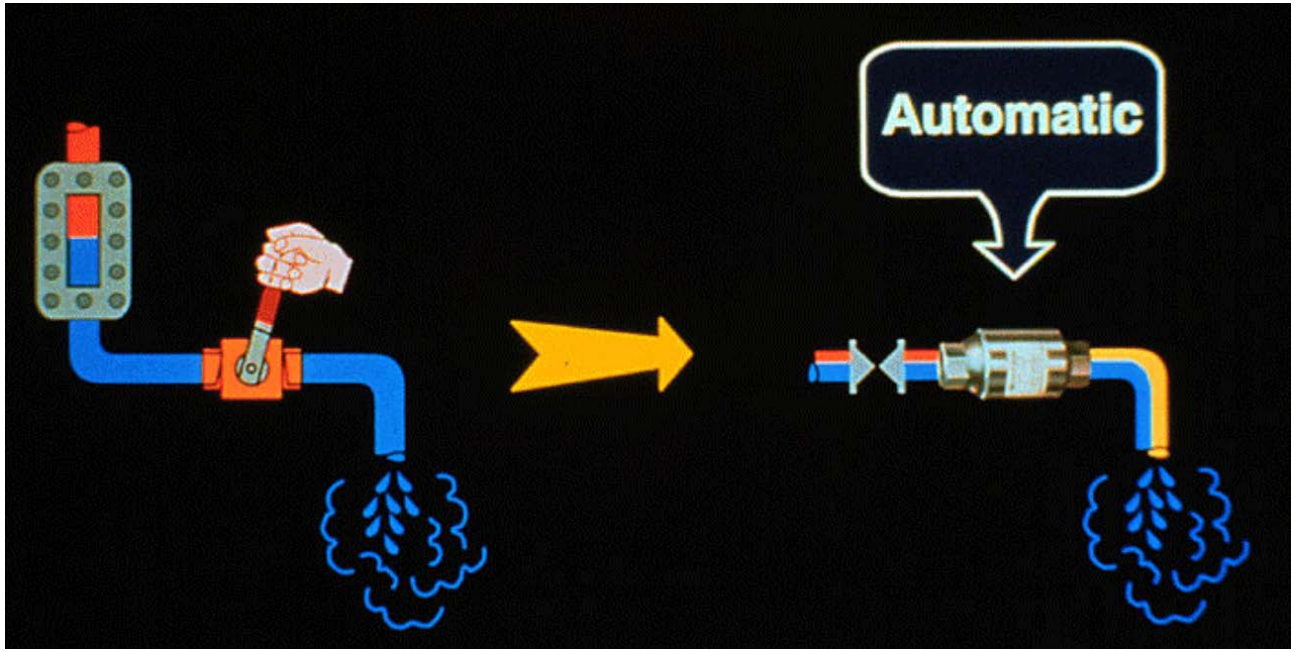

Steam Trap Applications in Hospitals

- Drip legs throughout Steam distribution piping
- Steam heat Exchangers for building heat and domestic hot water
- Humidifiers
- Sterilizer equipment
- Cooking equipment (kettles)

Importance of Traps– Water Hammer!!!

- Traps help prevent water and steam from coexisting in the same pipe
- When they do it can create differential shock water hammer
- Severe cases of water hammer can split pipe and become deadly
- Leaking and plugged traps can both cause water hammer
- During start-up issue is most relevant

Steam main explosion in NYC from water hammer

Effects of Air and Non-condensables

- Air acts as insulator
- Air in steam systems will reduce HX and coil efficiencies
- Excessive amounts of air will render Sterilizers ineffective

Leaking Steam Traps

- Steam traps are prone to failure over time
- Leaking traps are huge energy wasters
- Traps not maintained for 3-5 YR have between 15-30% failure rate

Trap Orifice Diameter (in)	Steam Loss (lb/hr)		
	Steam Pressure		
	15	100	150
1/32	0.85	3.3	4.8
1/16	3.4	13.2	18.9
1/8	13.7	52.8	75.8
3/16	30.7	119	170

Annual Savings

- When operating at 8760 hr/yr and the cost of steam is $10/1000lbs
- Trap replacement costs are typically covered in local utility rebate
- Lowest hanging fruit when it comes to energy savings

Trap Orifice Diameter (in)	Annual Savings ($)		
	Steam Pressure		
	15	100	150
1/32	$74	$289	$420
1/16	$298	$1156	$1656
1/8	$1,200	$4,625	$6,640
3/16	$2689	$10,424	$14,892

Testing Steam Trap Frequency

- Frequency of testing should be based on trap working pressure
- Higher pressure traps are more likely to fail and waste more energy when they do

Steam Pressure	Testing Frequency
150 psig and Above	Weekly to Monthly
30 to 150 psig	Monthly to Quarterly
Below 30 psig	Annually

Suggested trap testing frequency according to the Department of Energy

Testing Traps by Temp: The Wrong Way

- Steam and Condensate exist at the same temp
- Measuring temp of trap outlet does not tell you if it is steam or condensate
- Massive difference in energy content between steam and condensate
- It can give insight if trap is cold or not and its pressure only

Pressure (psig)	Temp (F)	Saturated Water (BTU/lb)	Saturated Steam (BTU/lb)
0	212	180	1151
10	239	207	1159
50	297	267	1179
100	338	309	1190

Table of temperature and energy content for saturated steam and water at varying pressure

Testing Traps the Right Way

- Listen to trap operation with ultrasonic testing equipment
- The discharge sound of condensate vs steam is unique
- Best method: visual inspection
- Install 3 way valve with a port open to atm to check

Action Items / Takeaways

- Create a report listing every trap's location, application, and model
- Regularly test your traps report on energy and savings
- Understand local utility rebate opportunities to replace leaking steam traps
- Identify potential operational issues with incorrect trapping

Steam Pressure Reducing Valves (PRV)

Steam Distribution and PRVs

- Steam is distributed at High pressure and is reduced at point of use with PRVs
- PRVs are essential to operations in real times
- Pilot Operated Valves are most common
- Leaks can cause SRV to pop
- Failure to open starves equipment downstream of its needed energy

Pilot Operated Valve Operation

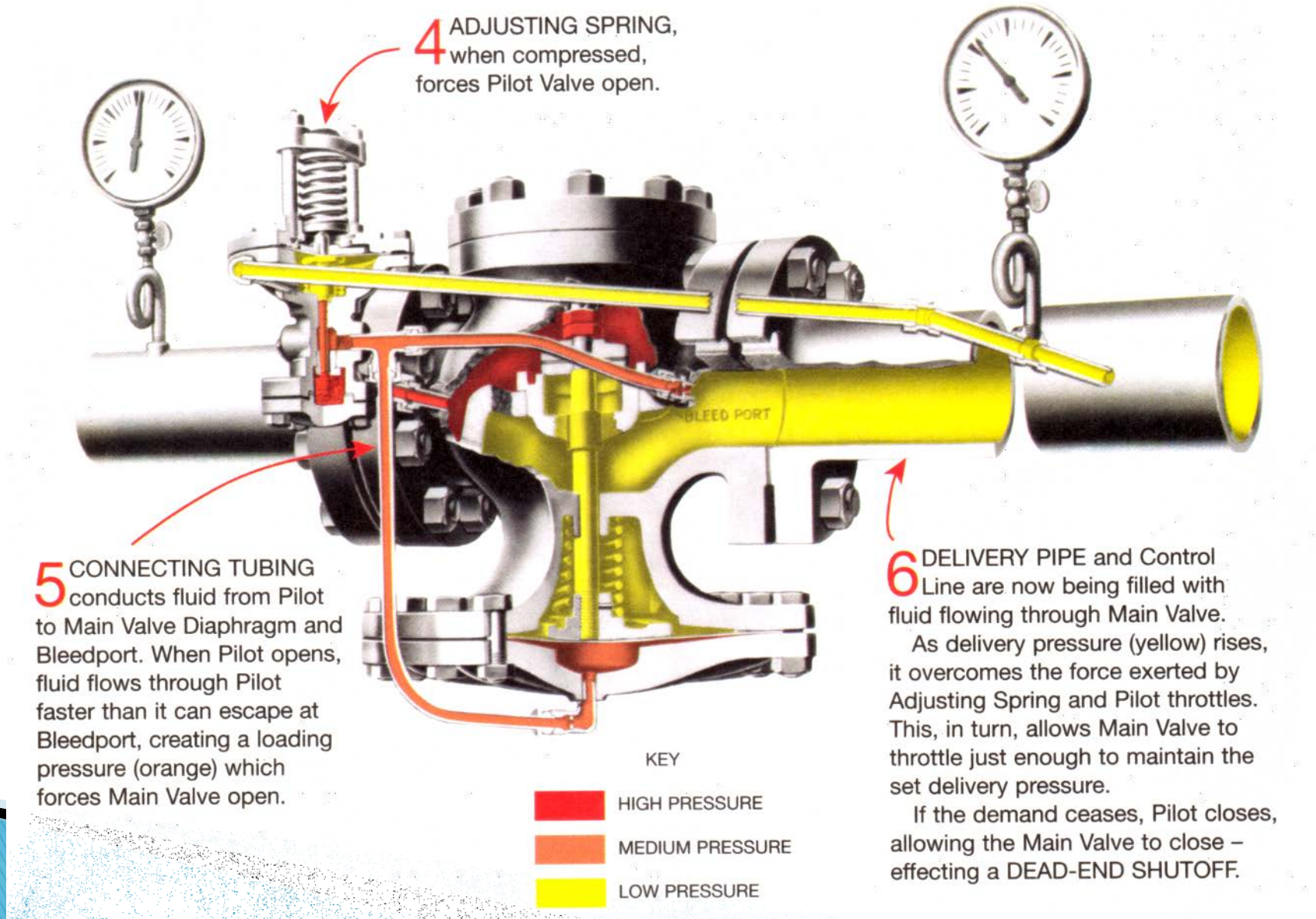

Maintenance Pointers on Pilot Op PRVs

- Always blowdown Strainers before PRVs before any startup. Nothing ruins steam valves faster than condensate
- When SRV pops on PRV station, main valve or pilot valve could be the cause
- Clean and check orifices on tubing
- Check and replace diaphraghms on main valves if valves are not opening

1/3 2/3 Pilot Operated Operation

- 1/3 smaller lead valve to handle reduced summer load
- 2/3 larger valve operating only when 1/3 cant match demand
- Set pressures are staggered by 2 psi, lead valve is set higher

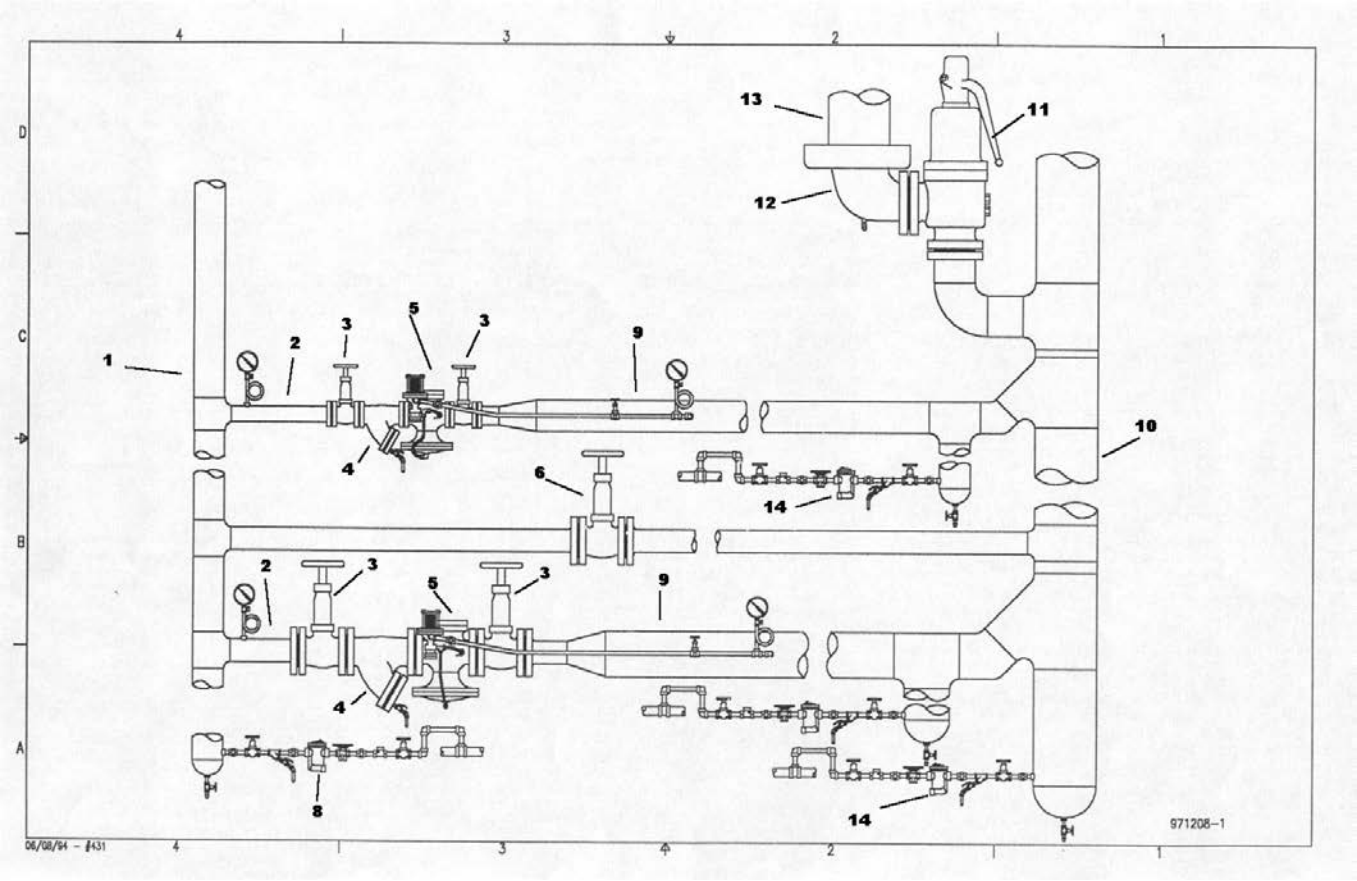

Boiler Pressure Adjustments: Be Careful!!

- The Steam loop is a system, nothing operates independently of another
- PRVs are sized according to pressure drops and steam demand
- If inlet pressure to a PRV is reduced it can become undersized starving equipment downstream
- Understand your complete steam system before adjusting your boiler pressure

Action Items/ Takeaways

- Be able to identify if main valve or pilot valve is leaking
- Operate 1/3 2/3 PRV stations correctly
- Understand your steam system before adjusting boiler pressure
- Always blowdown strainers before PRVs before on any startup

Questions

SOMES·NICK

& COMPANY

About Somes-Nick

- Somes-Nick is a manufactures rep for a variety of steam specialty equipment. Based out of Chicago they are the rep for Spence Engineering, Kunkle valve, Siemens Steam turbines, and Sterlco condensate pumps across the Midwest. For more technical steam system information call us to schedule a complimentary on-site steam training seminar.
- PH: 312-214-7800
- Email: Sales@Somes-Nick.com
- Website: http://somes-nick.com/